RoHS

Carriers are designed to mount on large optical rails (OBA-L/LH) or large low-profile optical rails (OBT-LH). They freely slide on the rails and can be locked in place.

- The CAA-80LF is designed to be attached to the bottom of a large optical rail for direct clamping to an optical vibration isolator or laboratory bench.
- The CAA-100LC is designed to assemble large optical rails at right angles to each other.

Guide

▶Friction-reducing tape is applied to the carrier surfaces that will be in contact with optical rails. Use as-is without removing the tape.

2D CAD 3D CAD

Outline Drawing

CAA-40LN/40LEE/40LUU

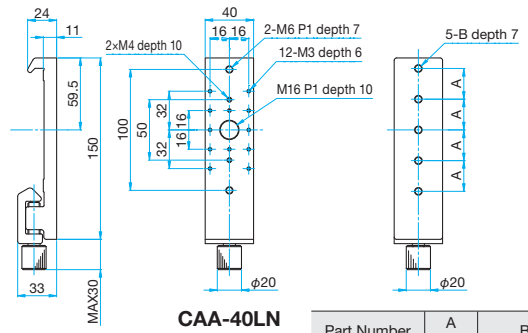

CAA-40LN

Part Number	A [mm]	B
CAA-40LEE	25	M6 P1
CAA-40LUU	25.4	1/4-20UNC

CAA-60L/65LEE/65LUU

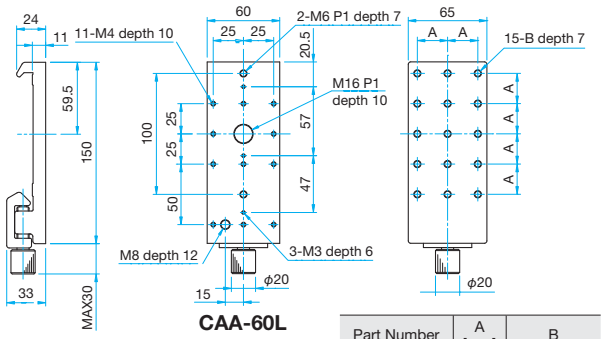

CAA-60L

Part Number	A [mm]	B
CAA-65LEE	25	M6 P1
CAA-65LUU	25.4	1/4-20UNC

CAA-80L

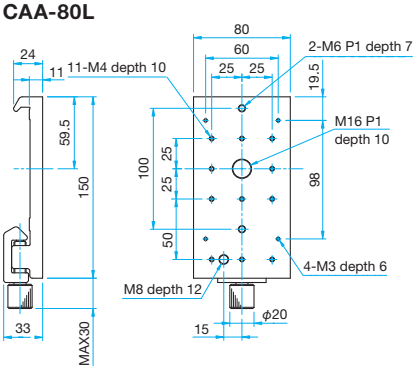

CAA-100L

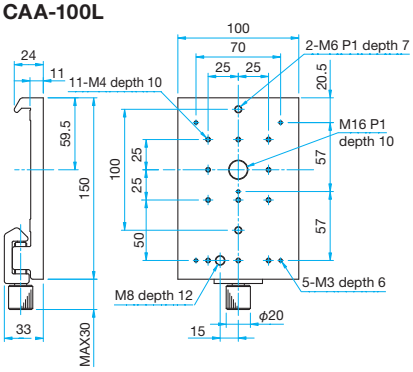

CAA-80LF

Hexagonal socket head cap screw M4×10...4 screws, Flat washer

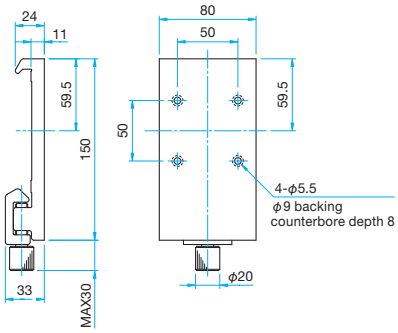

CAA-120L/120LEE/120LUU

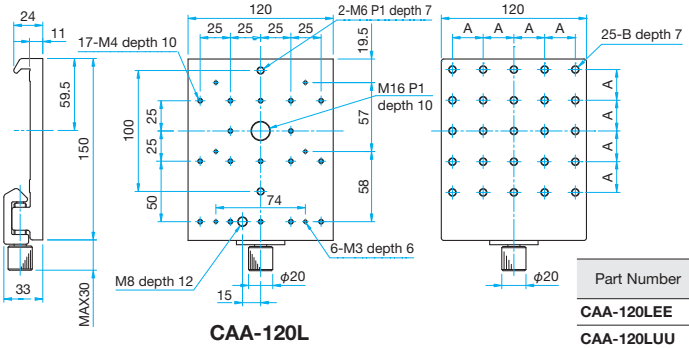

CAA-120L

Part Number	A [mm]	B
CAA-120LEE	25	M6 P1
CAA-120LUU	25.4	1/4-20UNC

CAA-100LC

Hexagon socket head cap screw M6×12...4 screws

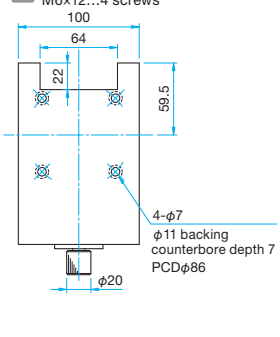

Specifications

Primary material: Aluminum
Finish: Black Anodized

Part Number			Compatible Optical Rails	Weight [kg]
M4	M6	INCH		
CAA-40LN	CAA-40LEE	CAA-40LUU	Large optical rails (OBA-L*/LH) Large low-profile optical rails (OBT-LH/LUU)	0.29
CAA-60L	—	—		0.39
—	CAA-65LEE	CAA-65LUU		0.42
CAA-80L	—	—		0.5
CAA-100L	—	—		0.61
CAA-120L	CAA-120LEE	CAA-120LUU		0.72
CAA-80LF	—	—		0.51
CAA-100LC	—	—		0.57