α Axis Goniometers
αβ Axis Goniometers

GOHTA-120A RoHS Catalog Code W7139
GOHTA-120B RoHS Catalog Code W7140

Stage Size 120 × 120 mm

The primary material is aluminum, but the ball guide type positioning slide offers high load capacity.

Guide

▶Contact our Sales Division if you desire a rotation center height not listed in the catalog.

2D CAD 3D CAD

Outline Drawing

GOHTA-120A182/228 Hexagonal socket head cap screw M4×10…4 screws Spring washer

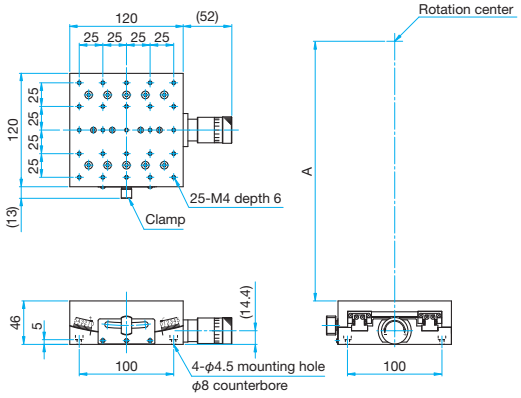

Part Number	A (mm)
GOHTA-120A182	182
GOHTA-120A228	228

GOHTA-120B182 Hexagonal socket head cap screw M4×10…4 screws Spring washer

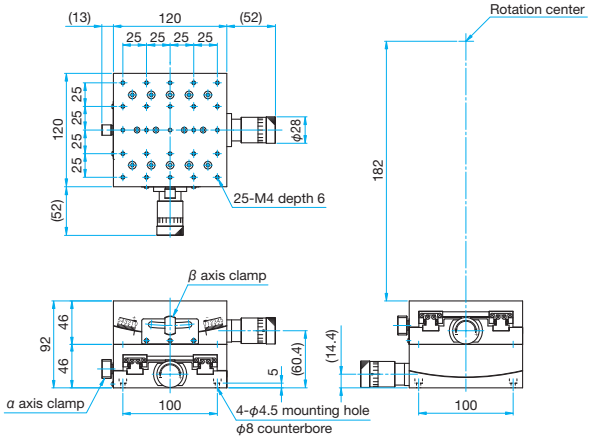

Specifications

Part Number	METRIC	GOHTA-120A182	GOHTA-120A228	GOHTA-120B182
Stage Size [mm]		120×120	120×120	120×120
Axes of Travel		α axis		αβ axis
Rotation Center Height [mm]		182	228	182
Angle Range [°]	(Upper) β axis	—	—	±5
	(Lower) α axis	±5	±5	±5
Vernier Readable Resolution		1′	1′	1′
Travel per Knob Rotation [°]	(Upper) β axis	—	—	about 0.33
	(Lower) α axis	about 0.33	about 0.33	about 0.33
Rotation Center Displacement [mm]		ϕ0.02 or loss	ϕ0.02 or loss	ϕ0.04 or loss
Guide Method		Extended contact ball bearing guide		
Primary Material		Aluminum		
Finish		Black anodized		
Load Capacity [N]		294 (30.0kgf)	294 (30.0kgf)	294 (30.0kgf)
Max. Moment Capacity	Pitch [N·m]	19.6	19.6	19.6
	Roll [N·m]	44.1	44.1	19.6
Moment Stiffness	Roll [″/N·cm]	0.02	0.02	—
Parallelism [μm]		100	100	200
Weight [kg]		2.2	2.2	4.4

HOURS
www.hours-web.com